SIDE-POWER
Thruster Systems

Product Specifications SR 100/185 T

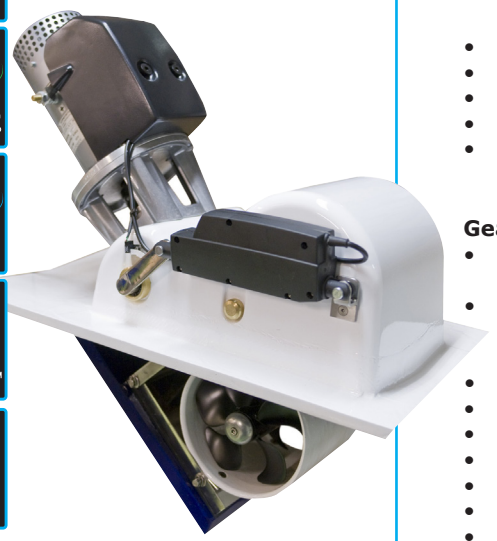

Some boats do not have the possibility to fit a tunnel thruster and thereby require a retractable thruster. Side-power now launches the first models of a series of retractable thrusters where we have talked to the market and identified the weaknesses in existing solutions and improved these to offer retractable thrusters in true Sidepower spirit with no compromise on safety and reliability.

The retracting thrusters are built with the same high safety standards as all Side-Power products, and incorporate all features introduced with the SE-series thrusters. Our focus on safety is a totally integral part of the product design so that everything from build quality to ease of installation is thought of to ensure long term reliability.

The SR-series thrusters incorporate all the advanced features from the SE-series tunnel thusters:

- *Q-prop*
- *Sealed Drive - lifetime lubricated*
- *Galvanic Separation*
- *IPC intelligence for extra safety*

Description:

Typical boat size	40 - 55 ft • 12 - 17 m
Propulsion system	Twin
Available for DCsystem	12V or 24V
Weight	40kg/88lbs.

Specific Retracting thruster features:

- Plug and play S-Link two way communication control system
- Motor assembly rigid mounted on retract casing - no moving parts during retract operation, making critical cable connections very secure
- Compact measures
- Sturdy and reliable retract mechanism, avoids jamming
- Fast deployment time
- Easy to use control panel with status feedback from thruster
- Hatch deploys straight out of hull for minimal cutout gaps, creating minimal drag

Gearleg:

- Seawater resistant bronze, CNC machined in one process to ensure 100% correct tolerances, angles and measurements.
- Sealed gearleg with long-life "mechanical" seal where polished ceramic and carbon surfaces form the only moving sealing surfaces, ensuring protection against damaging water intrusion into gear leg.
- Lifetime lubricated with special gear-oil.
- Hardened and ground precision spiro-conical gears.
- Propeller shaft with double ball bearings fitted in correct tolerances.
- Driveshaft with ball bearing and special sleeve bearing in correct tolerances.
- Connection between motor and driveshaft by flexible coupler
- 5 bladed composite "Q-prop" propeller, skewback design.
- Zinc anode protection directly on gearleg, easy to access and change.
- Gearleg galvanically insulated from bracket/motor

Performance and specifications at one tunnel diameter depth* :

	At 10,5V/21V	**At 12,0V/24V**
Thrust**	100kg/220lbs.	< 116kg/256lbs.
Output power	6,3kW/8,4 Hp	< 7,8kW/10,5Hp
Average current draw	740A/340A	< 820A/375A
Continous run time (20^{0}C)	3 min.	> 2,5 min.
Approx. long term run time	10% of time	6% of time
Min. battery CCA rating 12V/24V	750/400 CCA DIN - 1425/760 CCA SAE	
Sidepower fuse size:		ANL500/ANL325

Safety features on thruster (see separate sheet for control panels):

- Forced shut-down by overheat sensor in motor
- All internal leads with extra insulation of webbed silicon increase resistance to heat and mechanical wear. Connectors have positive locking, so that you have to pull by the connectors to release. You cannot pull off by the wires and they will not loosen by themselves.
- S-link integrated IPC for protection against:
  - direct drive direction change
  - unique, patented protection of solenoid from extra wear and damages in low voltage situations for example caused by drained or damaged batteries as well as "auto-stop" without the need for the skipper to shut down the main switch immediately to stop the thruster in case of a solenoid lock-in**

Notes !

* Actual performances, current consumption etc. will vary for each installation depending on many factors. Spesifications here given at one tunnel diameter depth and with voltage at thruster as shown. If you install
deeper the thrust will be more as well as the current consumption, and the running time will be reduced. Electromotors power and efficiency tolerances are +/- 6%.

** Patented safety features in the thruster S-link controlbox.

Confidence by Control
SIDE-POWER.com

PRODUCT SPECIFICATIONS
SR 100/185 T

SIDE-POWER
Thruster Systems

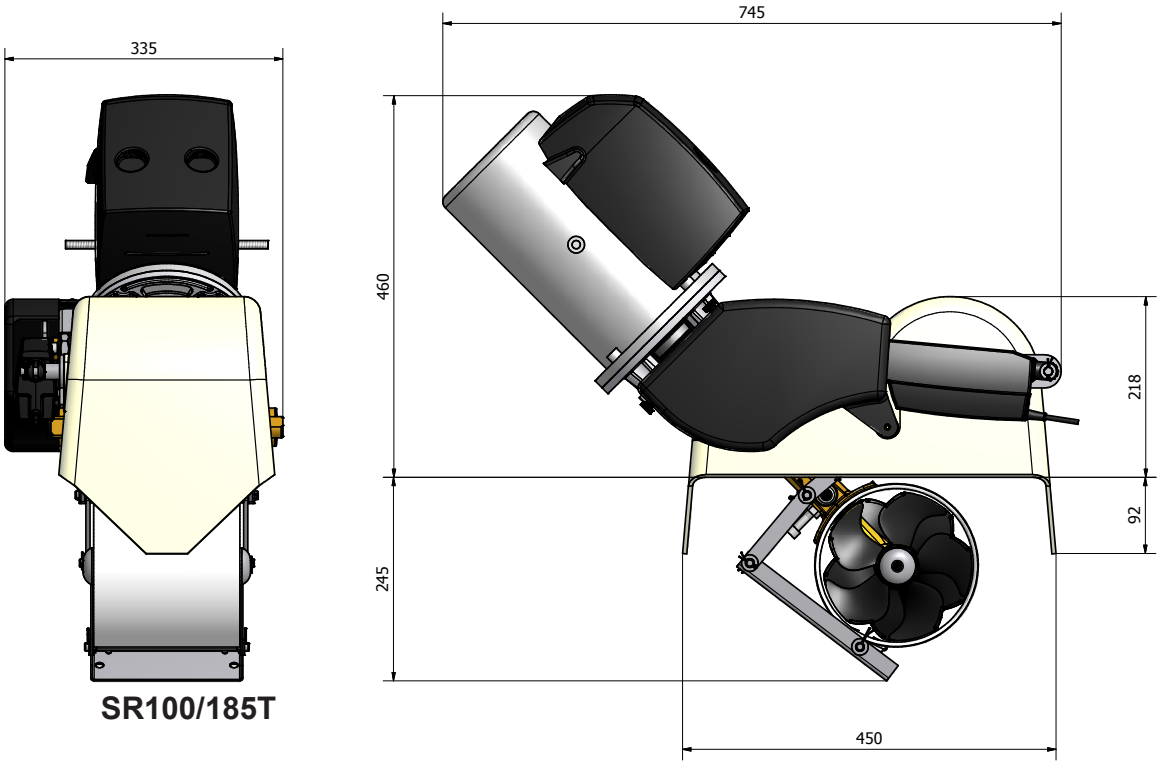

SR100/185T

Battery & cable recommendations:

Model	Voltage	Nominal current draw	Min. battery CCA		>7m total + & -		7-14m total + & -		15-21m total + & -		22-28m total + & -		28-35m total + & -		36-45m total + & -	
					Min.	Rec.	Min.	Rec.	Min.	Rec.	Min.	Rec.	Min.	Rec.	Min.	Rec.
SR100/185T	12 V	740 A	DIN: 750 SAE: 1425	mm^2 AWG	95 3/0	95 3/0	2x 70 2x 2/0	2x 95 2x 3/0	2x 95 2x 3/0	*280**	*250**	*375**	NA	NA	NA	NA
	24 V	340 A	DIN: 400 SAE: 760	mm^2 AWG	35 1	50 1/0	50 1/0	70 2/0	60 2/0	95 3/0	95 3/0	120 4/0	120 4/0	2x 95 2x 3/0	2x95 2x 3/0	2x 120 2x 4/0

Minimum and recommended cable dimensions can be identical due to safety margins and cable heat considerations for short cable lenghts.

* Minimum or recommended cable cross section in mm^2

S-link™

TC-121 S-link contol panel for retracting thrusters:

- Bus-based two way communication system
- Thin cables with compact connectors
- Waterproof connectors
- Thruster status indicators
- Easy operation - activate panel and thruster deploys, shut off panel and thruster retracts.

This document may contain typographical errors, to which Sleipner Motor assumes no responsibility.

Confidence by Control
SIDE-POWER.com

Sleipner Motor AS
P.O. Box 519,
N-1612 Fredrikstad, Norway
Tel: +47 69 30 00 60
Fax: +47 69 30 00 70
sidepower@sleipner.no
www.side-power.com